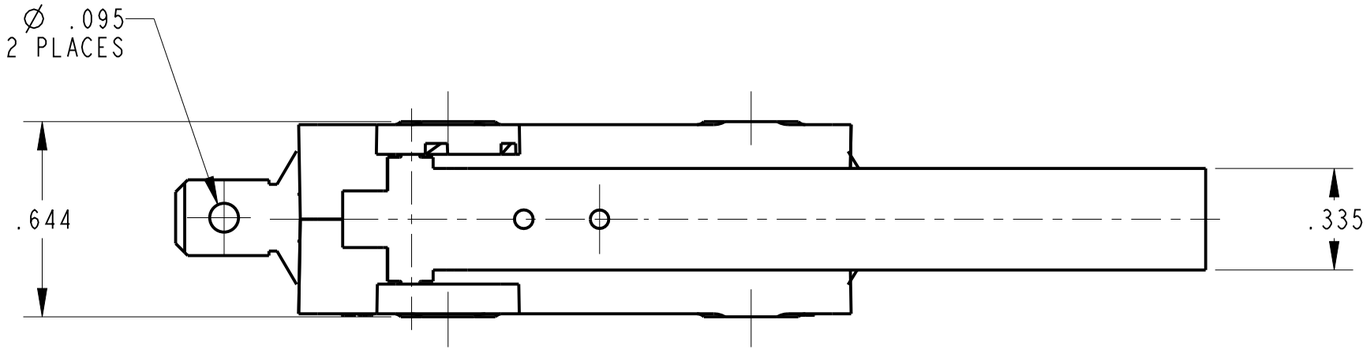

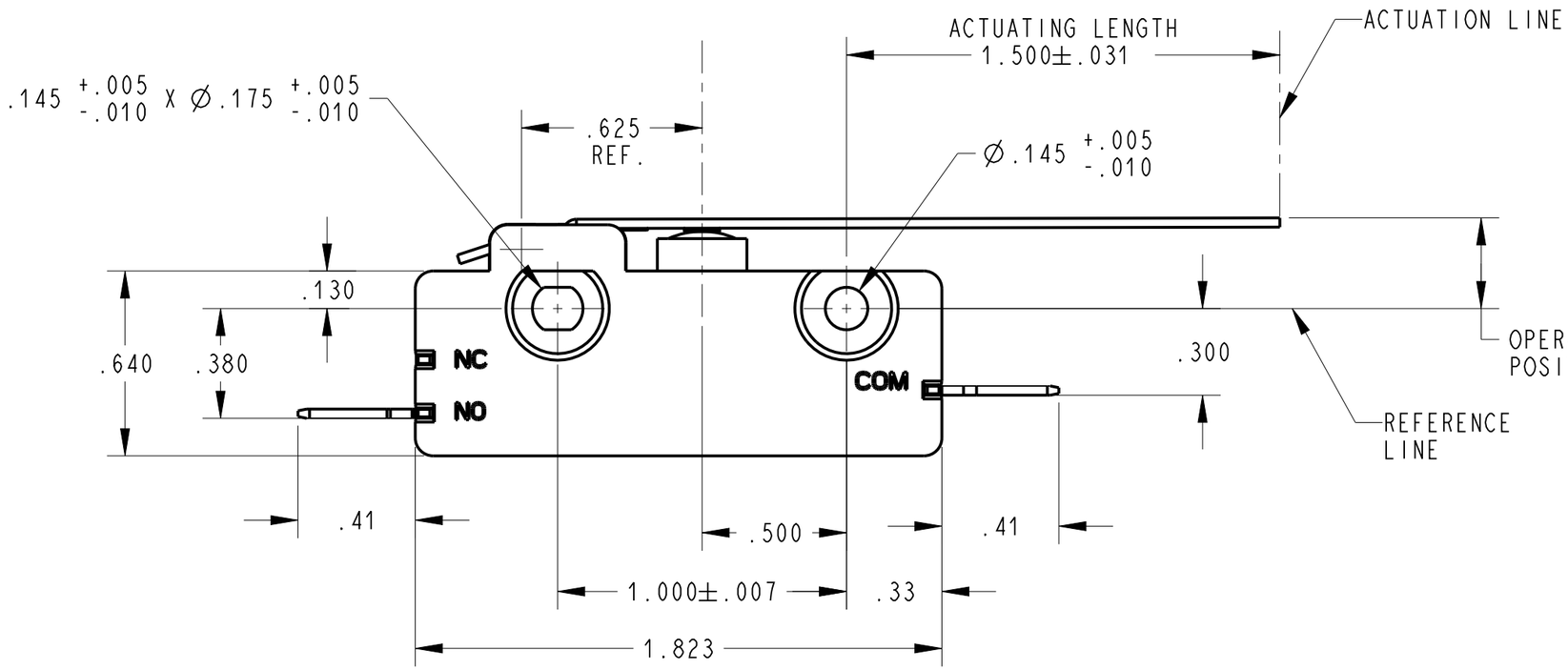

NOTES (UNLESS OTHERWISE SPECIFIED):

1. SWITCH CHARACTERISTICS

PRE-TRAVEL	.250 MAX.
OPERATING POSITION	.250 TO .375
OVER TRAVEL	.187 MIN
MOVEMENT DIFF.	.093 MAX.
OPERATING FORCE grams	100 MAX.
RELEASE FORCE grams	15 MIN.

ALL CHARACTERISTICS ARE TAKEN AT THE ACTUATION LINE AND MEASURED FROM THE REFERENCE LINE.

2. c UL us ELECTRICAL RATING
   15A, 125/250VAC
   3/4HP, 125VAC
   1-1/2HP, 250VAC
   2 A, 48 VDC

3. TERMINALS COMMON & N.O. ARE .250 WIDTH x .032 THICKNESS.

4. RECOGNIZED TO U.S. AND CANADIAN REQUIREMENTS UNDER THE COMPONENT RECOGNITION PROGRAM OF UNDERWRITERS LABORATORIES, INC.

5. TEMPERATURE RATINGS: -40°C TO +105°C

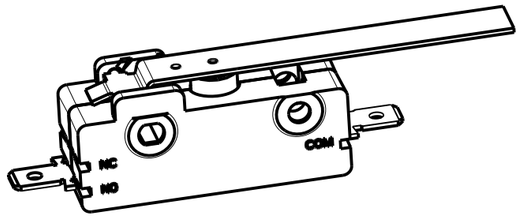

SHOWN IN A NON CLINCHED STATE
SCALE 1:1

ORIGINAL ON PRO/E

DWN:	C RAMOS
APVD:	E OROS
DATE:	19-Aug-08

THIRD ANGLE PROJECTION

PROJECT/ CSR
4000000138

REV	ECO NO.	DATE	PREP	APVD
C	Z000370093	30-Jun-16	JPD	ELL

TOLERANCE UNLESS SPECIFIED

DWG UNITS	X.XX	X.XXX	ANGLES
INCHES	± 0.02	± 0.015	± 5.0°

ZF Electronic Systems
11200 88th AVE. PLEASANT PRAIRIE, WI 53158

NAME / DESCRIPTION
SPEC DRAWING

B ITEM NO. 0E13-01H0

SCALE: 2:1 SH 1 OF 1