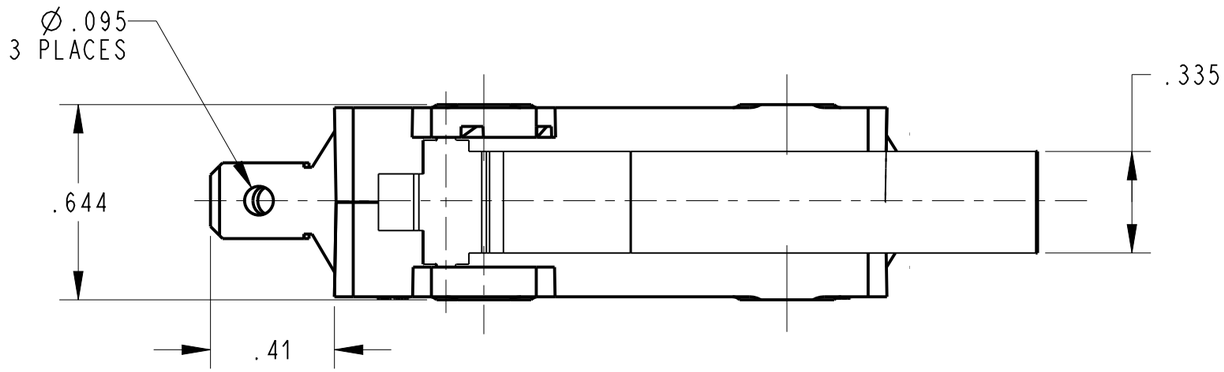

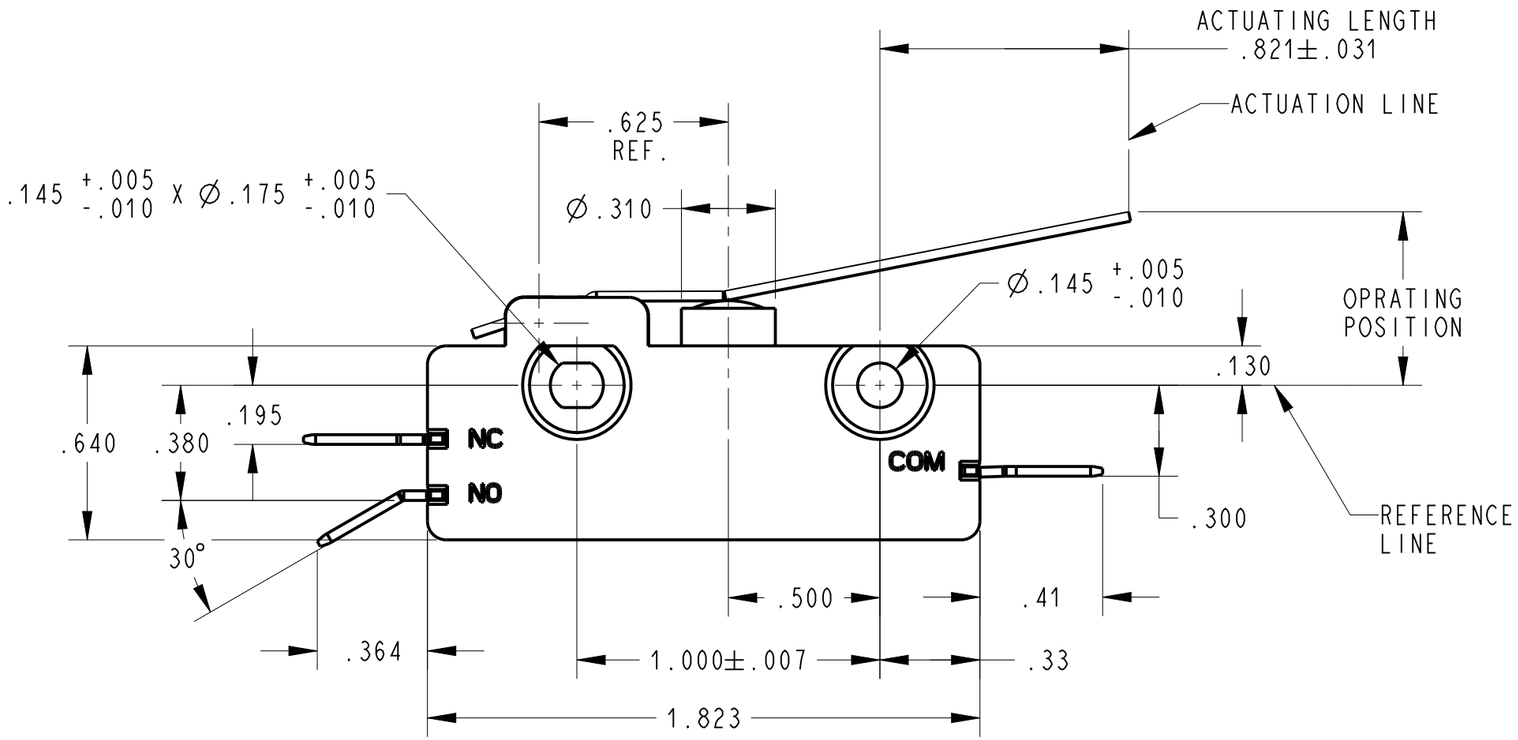

NOTES UNLESS OTHERWISE SPECIFIED:

1. SWITCH CHARACTERISTICS

REST POSITION	.824 MAX.
PRE-TRAVEL	.312 MAX.
OPERATING POSITION	.406 TO .530
OVER TRAVEL	.105 MIN.
MOVEMENT DIFF.	.050 MAX.
OPERATING FORCE grams	280 MAX.
RELEASE FORCE grams	25 MIN.

ALL CHARACTERISTICS ARE TAKEN AT THE ACTUATION LINE AND MEASURED FROM THE REFERENCE LINE.

2. c UL us ELECTRICAL RATING
   25A, 125/250VAC; 1 HP, 125VAC
   2 HP, 250VAC
   2 A, 48 VDC

3. TERMINALS: COMMON, N.C. & N.O. ARE .250 WIDTH X .032 THICKNESS.

4. RECOGNIZED TO U.S. AND CANADIAN REQUIREMENTS UNDER THE COMPONENT RECOGNITION PROGRAM OF UNDERWRITERS LABORATORIES. INC..

5. TEMPERATURE RATINGS: -40°C TO +105°C

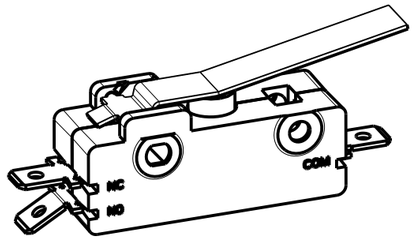

SHOWN IN A NON CLINCHED STATE
SCALE 1:1

ORIGINAL ON PRO/E

D	Z000369882	30-Jun-16	JPD	ELL
REV	ECO NO.	DATE	PREP	APVD

DWN: JML
APVD: CJD
DATE: 12-Dec-96

THIRD ANGLE PROJECTION

PROJECT/ CSR
4000000138

TOLERANCE UNLESS SPECIFIED			
DWG UNITS	X.XX	X.XXX	ANGLES
INCHES	± 0.02	± 0.015	± 5.0 °

ZF Electronic Systems
11200 88th AVE. PLEASANT PRAIRIE, WI 53158

NAME / DESCRIPTION
SPEC DRAWING

B | ITEM NO. 0E14-00H0
SCALE: 2:1 | SH 1 OF 1