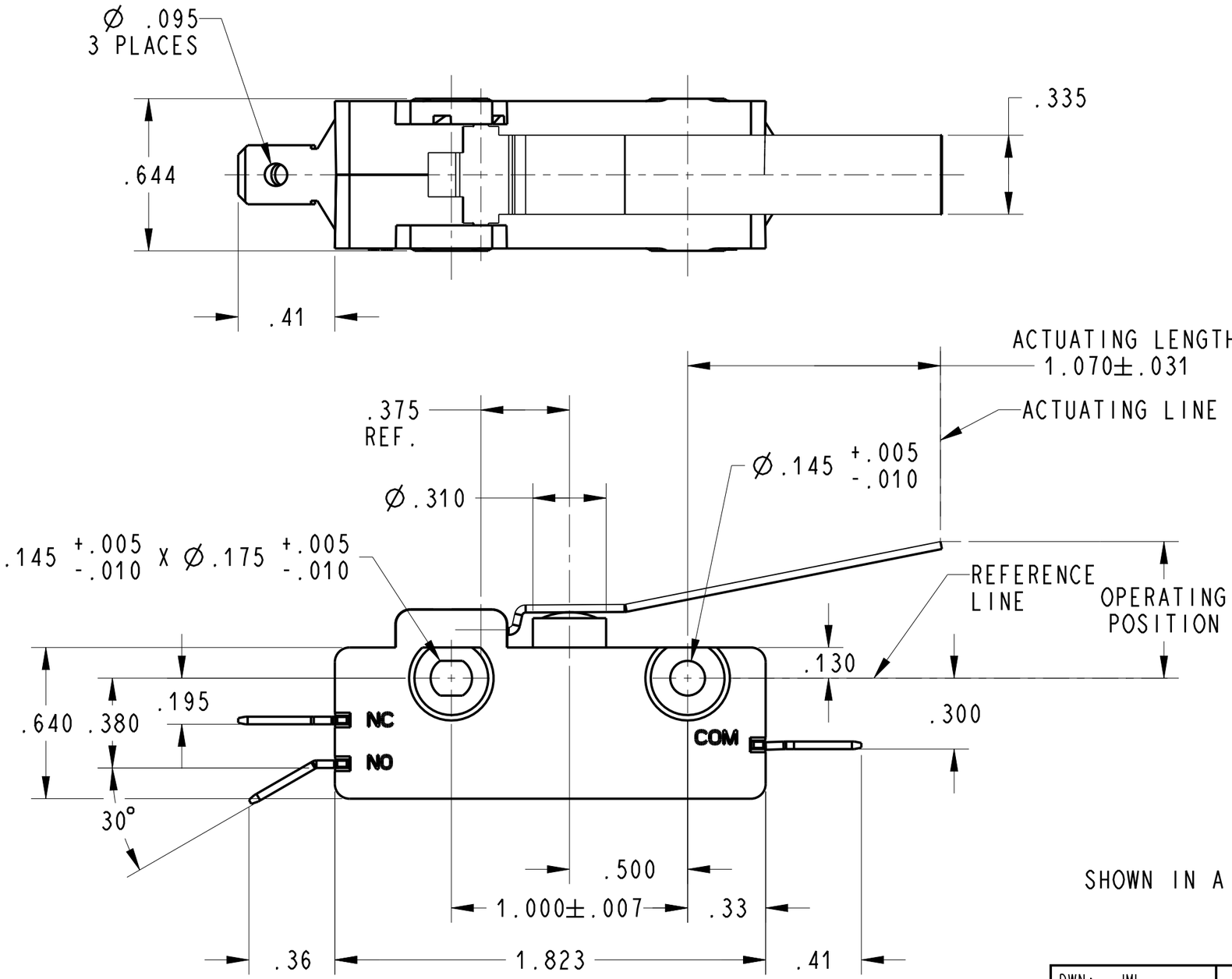

NOTES (UNLESS OTHERWISE SPECIFIED:

1. SWITCH CHARACTERISTICS

REST POSITION	1.024 MAX.
PRE-TRAVEL	.525 MAX.
OPERATING POSITION	.375 TO .499
OVER TRAVEL	.218 MIN.
MOVEMENT DIFF.	.080 MAX.
OPERATING FORCE grams	170 MAX.

ALL CHARACTERISTICS ARE TAKEN AT THE ACTUATION LINE AND MEASURED FROM THE REFERENCE LINE.

2. c UL us ELECTRICAL RATING
   25 AMPS, 125/250VAC
   1 HP, 125VAC
   2 HP, 250VAC
   2 A, 48 VDC

3. TERMINALS: COMMON, N.C. & N.O. ARE .250 WIDTH x .032 THICKNESS.

4. RECOGNIZED TO U.S. AND CANADIAN REQUIREMENTS UNDER THE COMPONENT RECOGNITION PROGRAM OF UNDERWRITERS LABORATORIES. INC.

5. TEMPERATURE RATING: -40°C TO +105°C

SHOWN IN A NON CLINCHED STATE
SCALE 1:1

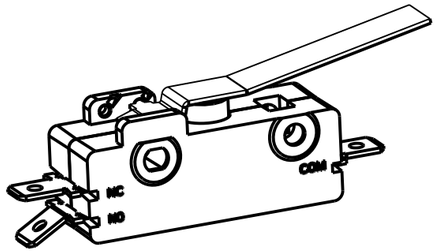

ORIGINAL ON PRO/E

DWN: JML
APVD: CJD
DATE: 12-Dec-96
THIRD ANGLE PROJECTION

ZF Electronic Systems
11200 88th AVE. PLEASANT PRAIRIE, WI 53158

NAME / DESCRIPTION
SPECIFICATION DRAWING

REV	ECO NO.	DATE	PREP	APVD
D	Z000369883	30-Jun-16	JPD	ELL

PROJECT/ CSR
4000000138

TOLERANCE UNLESS SPECIFIED

DWG UNITS	X.XX	X.XXX	ANGLES
INCHES	± 0.02	± 0.015	± 5.0°

B ITEM NO. 0E14-50H0
SCALE: 2:1 SH 1 OF 1