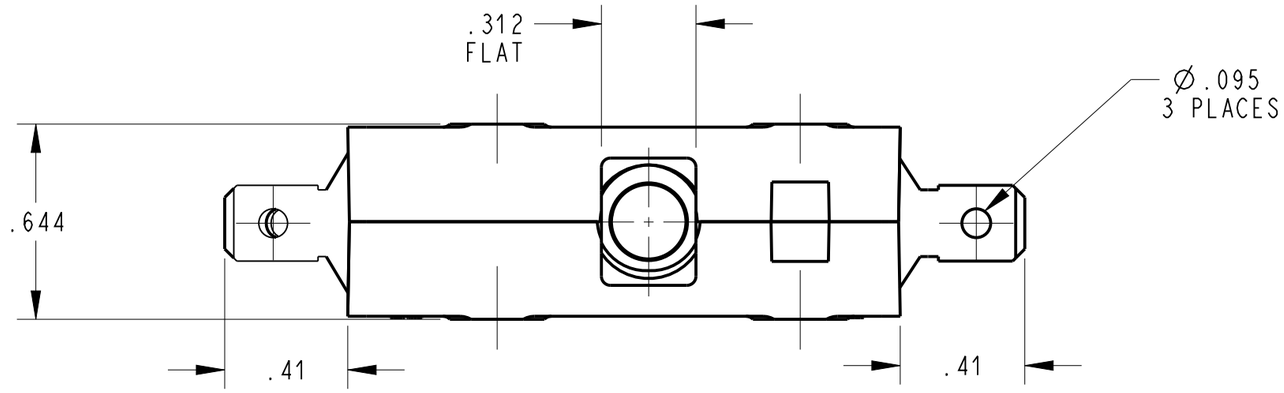


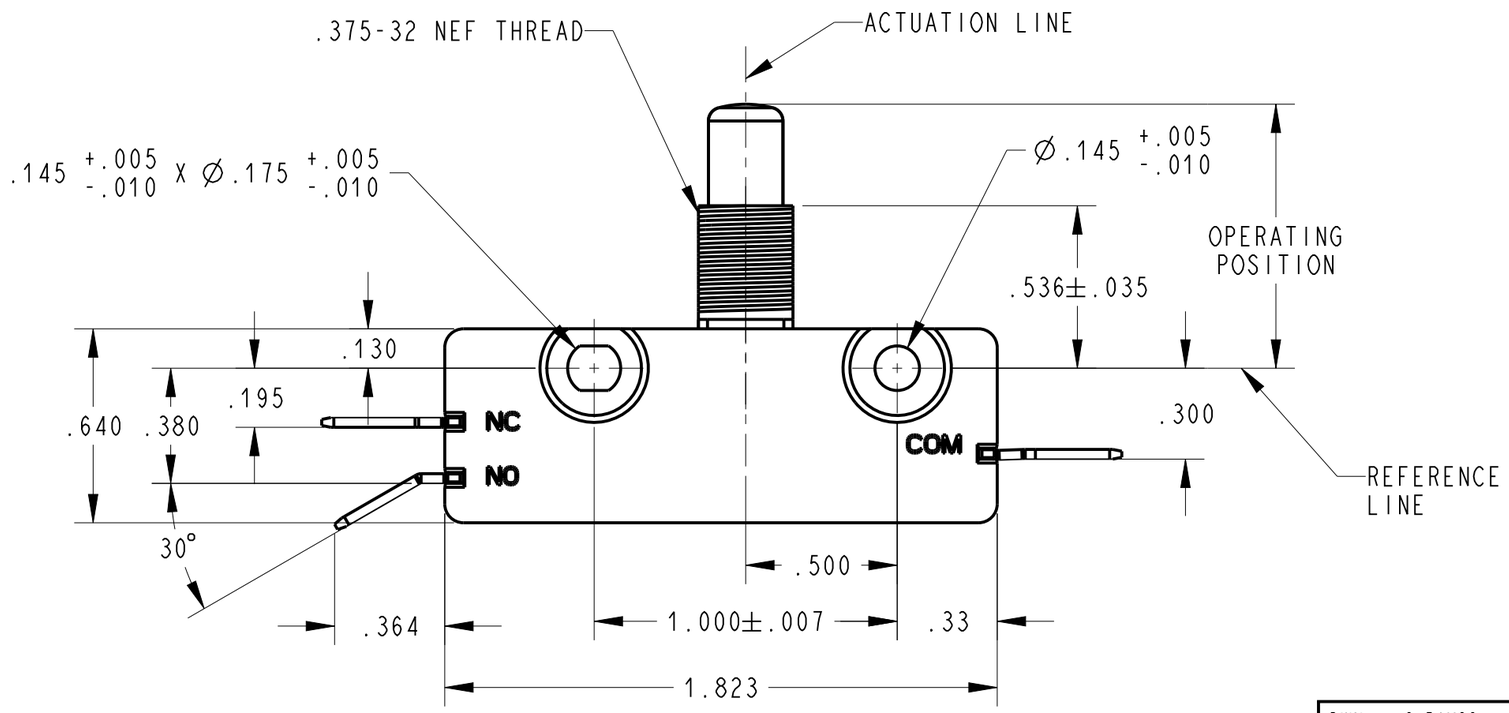


NOTES (UNLESS OTHERWISE SPECIFIED):

1. SWITCH CHARACTERISTICS

| | |
|---|---|
| REST POSITION | .875 MAX. |
| PRE-TRAVEL | .050 MAX. |
| OPERATING POSITION | .782 TO .842 |
| OVER TRAVEL | .218 MIN. |
| MOVEMENT DIFF. | .015 MAX. |
| OPERATING FORCE grams | 425 MAX. |
| RELEASE FORCE grams | 85 MIN. |

ALL CHARACTERISTICS ARE TAKEN AT THE ACTUATION LINE AND MEASURED FROM THE REFERENCE LINE.

2. c UL us ELECTRICAL RATING
   0.1 A, 125 VAC
   0.1 A, 30 VDC

3. TERMINALS COMMON, N.C. & N.O. ARE .250 WIDTH x .032 THICKNESS.

4. RECOGNIZED TO U.S. AND CANADIAN REQUIREMENTS UNDER THE COMPONENT RECOGNITION PROGRAM OF UNDERWRITERS LABORATORIES, INC.

5. TEMPERATURE RATINGS: -40°C TO +105°C

6. ELECTRICAL LIFE AT RATED LOAD: 100,000 CYCLES

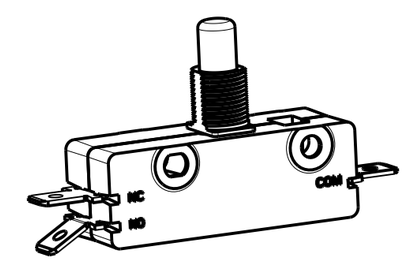


SHOWN IN A NON CLINCHED STATE
SCALE 1:1

ORIGINAL ON PRO/E

| | |
|---|---|
| DWN: | C RAMOS |
| APVD: | E OROS |
| DATE: | 17-May-08 |

THIRD ANGLE PROJECTION

PROJECT/ CSR
4000000138

| REV | ECO NO. | DATE | PREP | APVD |
|---|---|---|---|---|
| B | Z000370092 | 30-Jun-16 | JPD | ELL |

TOLERANCE UNLESS SPECIFIED

| DWG UNITS | X.XX | X.XXX | ANGLES |
|---|---|---|---|
| INCHES | ± 0.02 | ± 0.015 | ± 5.0 ° |

ZF Electronic Systems
11200 88th AVE. PLEASANT PRAIRIE, WI 53158

NAME / DESCRIPTION
SPEC DRAWING

B ITEM NO. 0G13-00M0

SCALE: 2:1 SH 1 OF 1