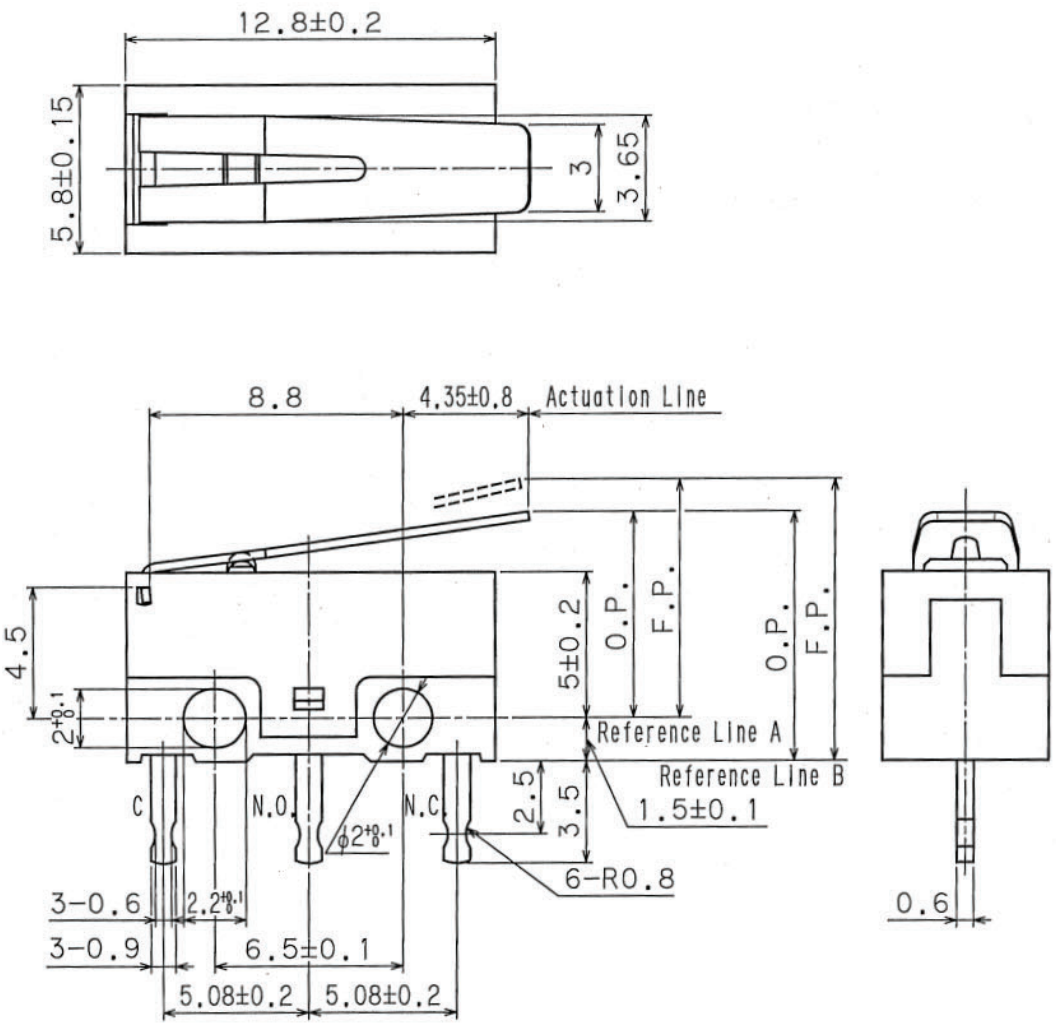

MARKING

NO	MARKS
1	RATINGS
2	UL Recognized Canadian National Recognized by UL
3	CIRCUITRY
4	LOT No. REF:01 6 A Z 1 week '06 year A:MON.~WED. B:THU.~SAT. Location Z:China T:Japan

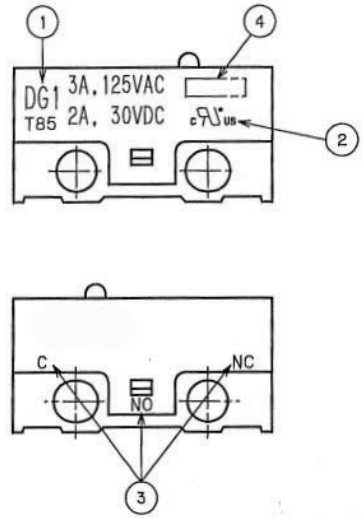

CONSTRUCTION

NO	NAME	MATERIAL	Qty
1	BASE UNIT	PPS COLOR:BLACK UL 94V-0	1
2	COVER	PBTP COLOR:BLACK UL 94V-0	1
3	BUTTON	PBTP COLOR:GRAY UL 94V-0	1
4	BRAKET(COM)	BRASS(SILVER PLATED)	1
5	BRAKET(N.O.)	BRASS(SILVER PLATED)	1
6	BRAKET(N.C.)	BRASS(SILVER PLATED)	1
7	BLADE	BERYLLIUM COPPER	1
8	MOVABLE CONTACTS	SILVER ALLOY	1
9	STATIONARY CONTACTS	SILVER ALLOY	2
10	ACTUATOR	STAINLESS	1

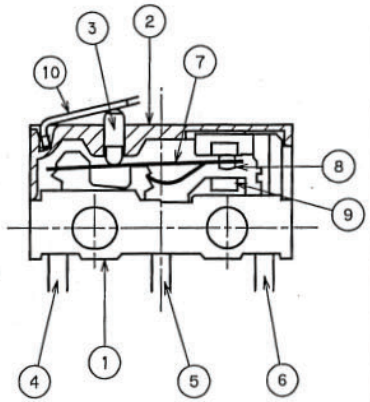

CIRCUITRY

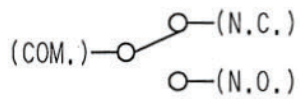

Note.1. Tolerance; unless otherwise specified ±0.4 mm

REVISE	DATE	REVISE	DATE
A ECN-65867	25.Jan.'06		
EDITION 1 FIXED	25.Jan.'06		

Controlled Copy 2006. 2. 10 Engineering Dept.

DWN	CKD	APP	REMARKS
H.Mizuno 25.Jan.'06	10.Feb.'06	10.Feb.'06	MANAGEMENT CODE: -C
SCALE NON	UNITS mm	PROJ. 3RD	

ZF Friedrichshafen AG
Electronic Systems
Cherrystrasse
D-91275 Auerbach/Opf.

DIVISION DES1 A3

Group	DG	Title	Micro Switch	Part No.	DG13-B1LA	DWG No.	305758	1/1