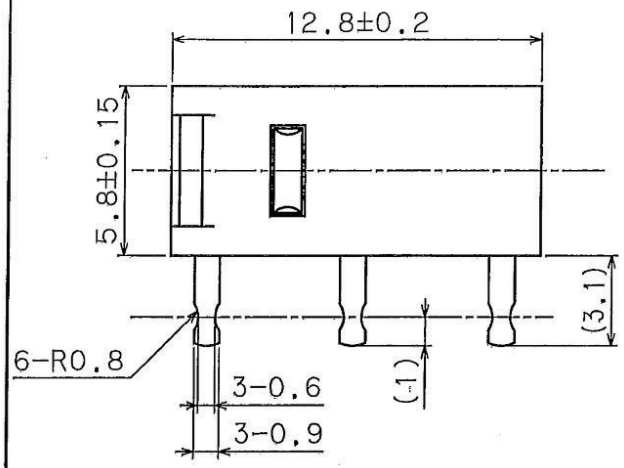

MARKING

NO	MARKS
1	RATINGS
2	UL Recognized Canadian National Recognized by UL
3	CIRCUITRY
4	LOT No.

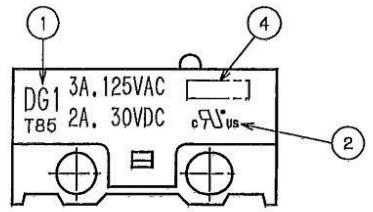

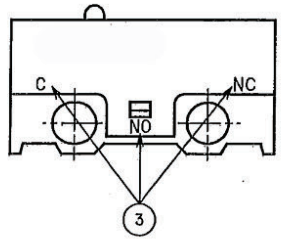

Uncontrolled Copy
2011. 4. 20
Engineering Dept.

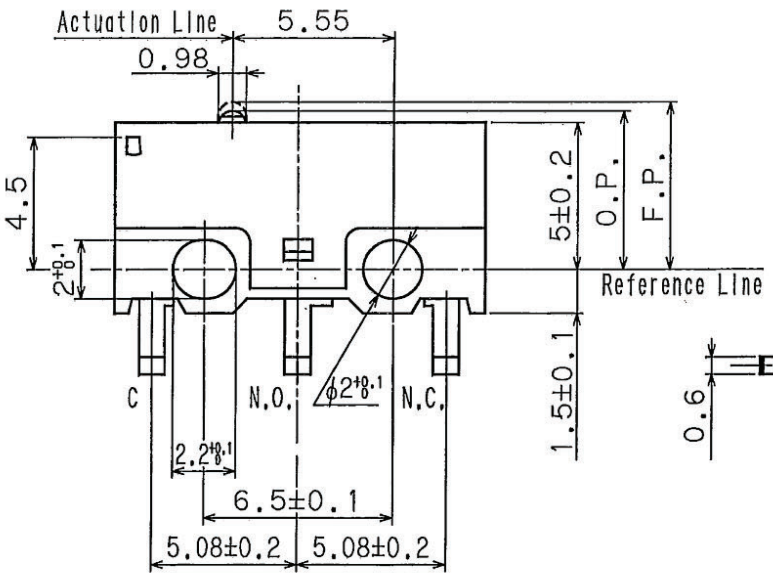

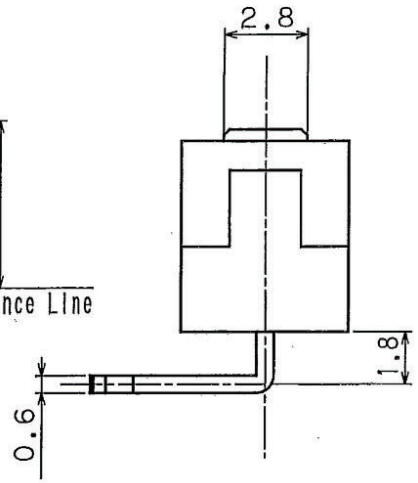

CONSTRUCTION

NO	NAME	MATERIAL	Qty
1	BASE UNIT	PPS COLOR:BLACK UL 94V-0	1
2	COVER	PBTP COLOR:BLACK UL 94V-0	1
3	BUTTON	PBTP COLOR:GRAY UL 94V-0	1
4	BRACKET(COM)	BRASS(SILVER PLATED)	1
5	BRACKET(N.O.)	BRASS(SILVER PLATED)	1
6	BRACKET(N.C.)	BRASS(SILVER PLATED)	1
7	BLADE	BERYLLIUM COPPER	1
8	MOVABLE CONTACTS	SILVER ALLOY	1
9	STATIONARY CONTACTS	SILVER ALLOY	2

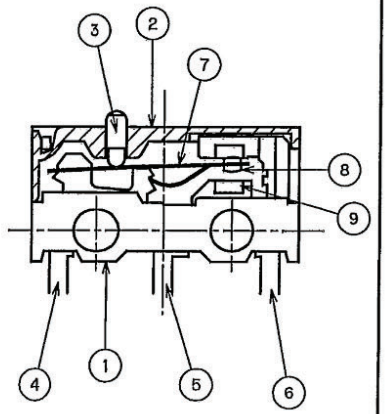

CIRCUITRY

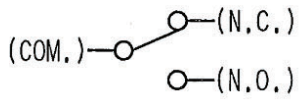

Note.1. Tolerance; unless otherwise specified ±0.4 mm

REVISE	DATE	REVISE	DATE
A ECN-67488	29.May.'09		
EDITION 1 FIXED			

DWN	CKD	APP	REMARKS
Y.Baba 29.May.'09	04Jun.'09	8Jun.'09	MANAGEMENT CODE: -CT
SCALE NON	UNITS mm	PROJ. 3RD	

ZF Friedrichshafen AG
Electronic Systems
Cherrystrasse
D-91275 Auerbach/Opf.

DIVISION DES1 A3

Group	DG	Title	Micro Switch	Part No.	DG13-B3AA	DWG No.	306762	1/1