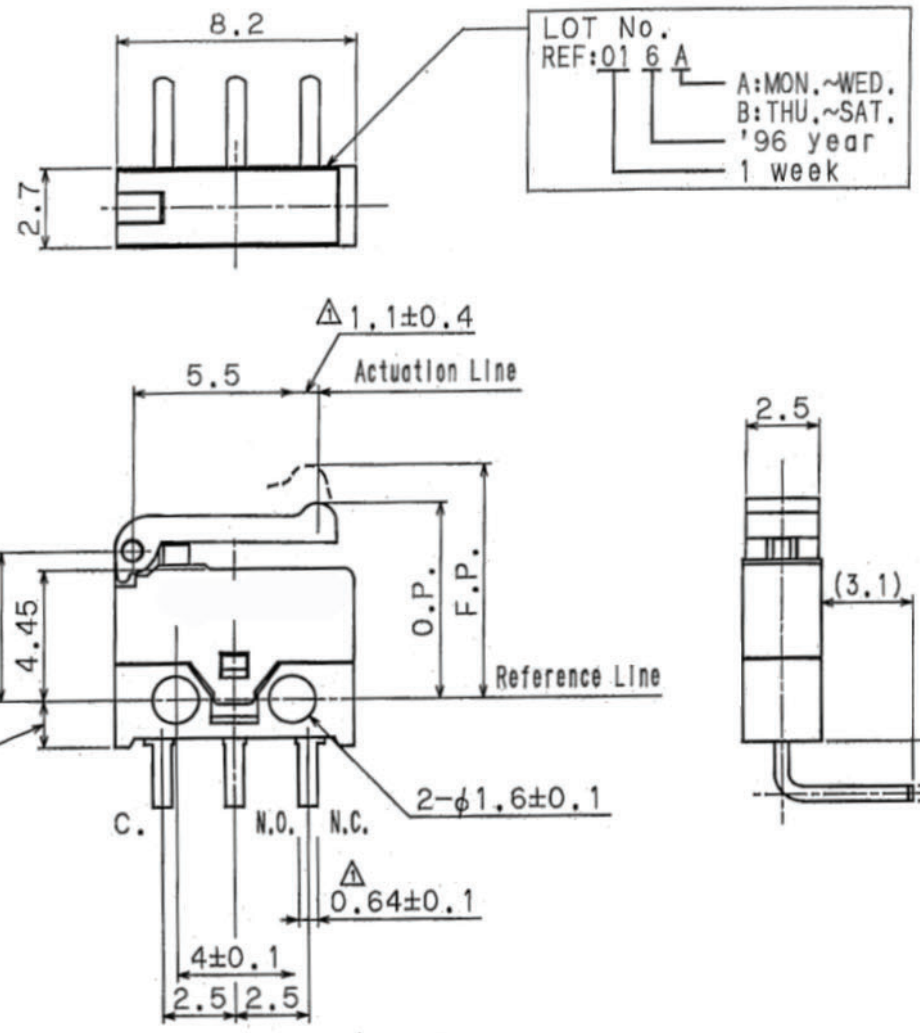

NO	NAME	MATERIAL	Qty
1	BUTTON	PBTP UL94V-0	1
2	COVER	PBTP UL94V-0	1
3	BASE UNIT	PPHS UL94V-0 COLOR:LIGHT BROWN	1
4	BRACKET (COM.NC.NO)	BRASS(SILVER PLATED)	1
5	BLADE	BERYLLIUM COPPER	1
6	STATIONARY CONTACTS	SILVER ALLOY(GOLD FLASHED)	2
7	MOVABLE CONTACTS	SILVER ALLOY(GOLD FLASHED)	1
8	ACTUATOR	PBTP UL94V-0	1

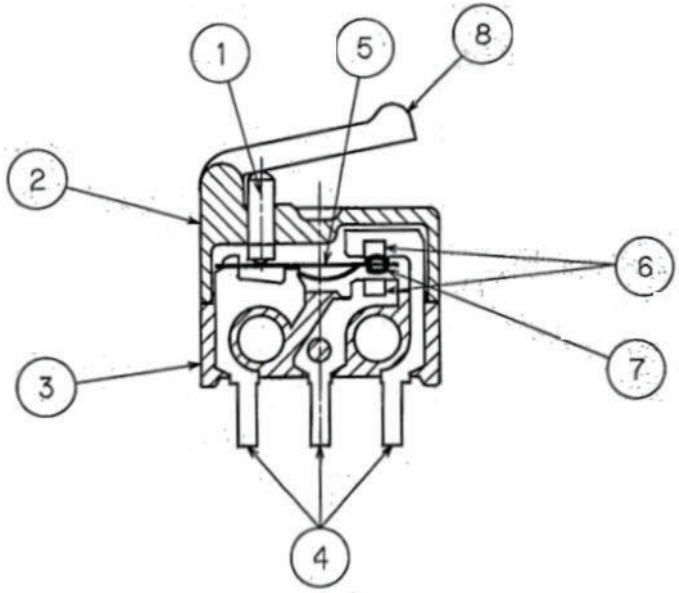

Note.1. Tolerance; unless otherwise specified ±0.2mm

CIRCUITRY

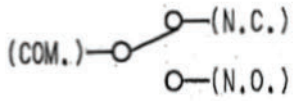

P-C Board Layout

Tolerance;±0.05
(TOP VIEW)

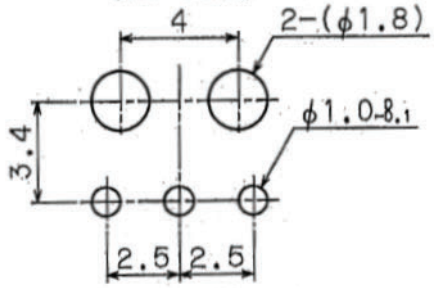

CONSTRUCTION

						DWN.	CKD.	APP.	REMARKS
						H. Hagihara 7.22.'98	K. Kawahara 7-23-'98	M. OHKUBO 7.23.'98	
2	ECN62498	7-22-'98				SCALE ×	UNIT mm	PROJ.	
1	ECN62321	8-5-'96							
	FIXED	5-06-'96							
	REVISED	DATE		REVISED	DATE				

TITLE	Out-line drawing	PART NO.	DH2C-C5PA	DWG. NO.	ZF Friedrichshafen AG Electronic Systems Cherrystrasse D-91275 Auerbach/Opf.