Gear Tooth Speed and Direction Sensor

Obsolete – June, 2016

SD100203 Sensors

Circuit protected Hall Effect gear tooth speed and direction sensor with adjustable aluminum housing

Description

The SD100203 has two Hall Effect sensors; one detects speed and the other detects direction of movement of gear teeth. The outputs are open collector transistors. The Speed output goes low (ON) when sensing the leading edge of a tooth and high (OFF) at the trailing edge of the tooth when run against a standard target (see diagram). The Direction output goes low (ON) for clockwise rotation and high (OFF) for counterclockwise rotation (as seen in the diagram); it is latched in that state as long as there is movement detected. The state of the Direction output always leads the rising edge of the Speed output – correct Direction sensing will occur faster after start-up than correct Speed sensing. An external pull-up resistor is required.

Features

- Separate digital outputs for speed and direction
- From near zero speed up to 15 kHz sensing capability
- RoHS compliant
- IP67
- Typical air gap of 1.5 mm (0.06")*

Typical Applications

- Wheel speed and direction
- Hoist speed and direction
- Transmission speed and direction
- Industrial feedback and control

Environmental Specifications

Vibration	Sinusoidal, 3.3 g max from 20 Hz to 1 kHz
Maximum Speed Detection	15 kHz
Operating Temperature	-40 ºC to 85 ºC (-40 ºF to 185 ºF)
Storage Temperature	-40 ºC to 85 ºC (-40 ºF to 185 ºF)
Ingress Protection	IP67

Electrical Specifications

Operating Supply Voltage	5 to 24 VDC
Maximum Input Voltage	30 VDC
Maximum Reverse Voltage	30 VDC
Supply Current	20 mA max
Output Sink Current	20 mA max
Typical Operating Time	5 µs
Recommended Pull-Up Resistor	See chart

Mechanical Specifications

Housing Material	Aluminum
Maximum Installation Torque Limit	5.65 Nm (50 in lb) on threads
Operating Air Gap / Sensing Distance* * With recommended target type; see drawing	1.5 mm (0.06")
Sensor Orientation	Sensitive; see drawing

Products

Part Number	Leads
SD100203	20 AWG x 305 mm (12")

Note: An external pull-up resistor is required, the value of which is dependent on the supply voltage. The resistor should be connected between the output and Vcc. Refer to the wiring diagram for lead colors or pin numbering as applicable.

Obsolete – June, 2016

Recommended External Pull-Up Resistor

Volts DC	5	9	12	15	24
Ohms	1k	1.8k	2.4k	3k	3k

Open Collector Sinking Block Diagram

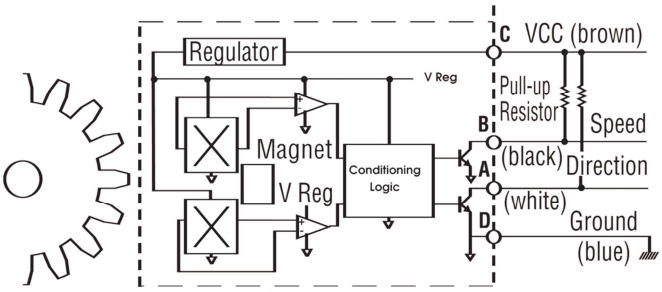

COLOR	DESCRIPTION
BLUE	GROUND
BROWN OR TAN	SUPPLY, V_{CC}
BLACK	SPEED OUTPUT
WHITE	DIRECTION OUTPUT

Dimensions mm (inches)

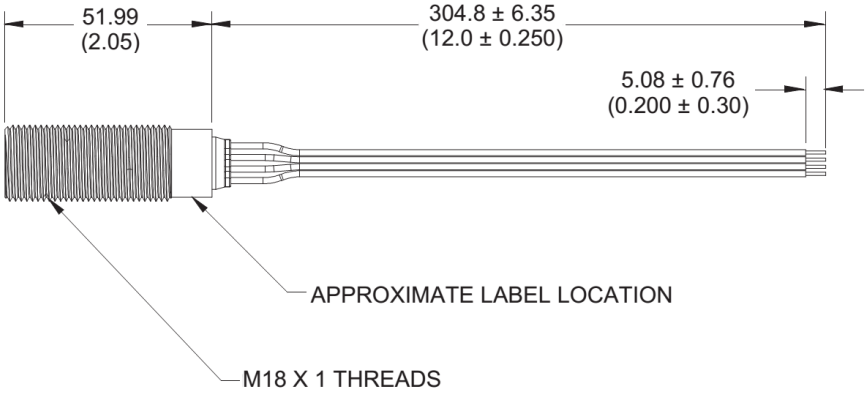

SENSOR IS ORIENTATION SENSITIVE.

CORRECT POSITIONING OF SENSOR IS WHEN LOCATING MARK IS PARALLEL TO THE AXIS OF ROTATION OF TARGET AND POINTING UP.

Installation

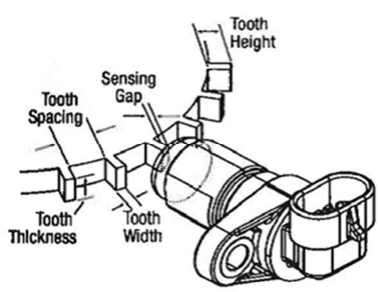

For best results, we recommend targets made from low carbon cold rolled steel. Other factors that influence sensor performance include gear tooth height and width, space between the teeth, shape of the teeth and thickness of the target. As a general guideline, consider a target with minimum parameters as shown below. Note that smaller dimensions may work, but testing for the application is required.

Tooth Height	Tooth Width	Distance between Teeth	Target Thickness
5.0 mm (.200")	2.5 mm (.100")	10 mm (.400")	6.35 mm (.250")

Obsolete – June, 2016