# Magnetic Proximity Sensors (Hall Effect)

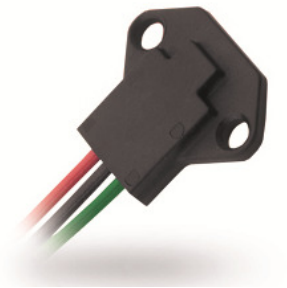

## MP1014 Sensors

Digital Hall-effect position sensor
in low-profile flange-mount housing

### Description

The MP1 Series sensors are one-piece non-contact solid-state position sensors. The sensors operate through the use of Hall Effect technology with magnetic fields generated by permanent magnets. They provide a sinking current output.

### Features

- Solid state reliability
- South pole sensitive
- Unipolar device
- RoHS compliant
- Low profile design
- IP65
- Turn on at 139 Gauss, turn off at 47 Gauss (MP101401)
- Turn on at 77 Gauss, turn off at 17 Gauss (MP101402)

### Typical Applications

- Door position & interlock
- Limit switch
- Flow/speed
- Home security
- Pedal switch

### Environmental Specifications

| | |
|---|---|
| Operating Temperature | -40 °C to 85 °C (-40 °F to 185 °F) |
| StorageTemperature | -40 °C to 100 °C (-40 °F to 212 °F) |
| Ingress Protection | IP65 |

### Electrical Specifications

| | |
|---|---|
| Operating Supply Voltage (MP101401) | 4.5 to 18 VDC |
| Operating Supply Voltage (MP101402) | 4.5 to 24 VDC |
| Supply Current | 3.0 mA typ., 5.2 mA max. |
| Output Current (Sink) | 20 mA max. |
| Maximum Reverse Voltage (MP101401) | 18 VDC |
| Maximum Reverse Voltage (MP101402) | 15 VDC |
| Recommended Pull-Up Resistor | See chart |

### Mechanical Specifications

| | |
|---|---|
| Housing Material | Glass-reinforced nylon plastic |
| Turn on / off (MP101401) | 139 Gauss / 47 Gauss |
| Turn on / off (MP101402) | 77 Gauss / 17 Gauss |

### Products

| Part Number | Leads |
|---|---|
| MP101401 | 24 AWG x 314 mm |
| MP101402* | 24 AWG x 314 mm |

*Not commonly stocked

Note: An external pull-up resistor is required, the value of which is dependent on the supply voltage. The resistor should be connected between the output and Vcc. Refer to the wiring diagram for lead colors or pin numbering as applicable.

## Recommended External Pull-Up Resistor

| Volts DC | 5 | 9 | 12 | 15 | 24 |
|---|---|---|---|---|---|
| Ohms | 1k | 1.8k | 2.4k | 3k | 3k |

## Open Collector Sinking Block Diagram

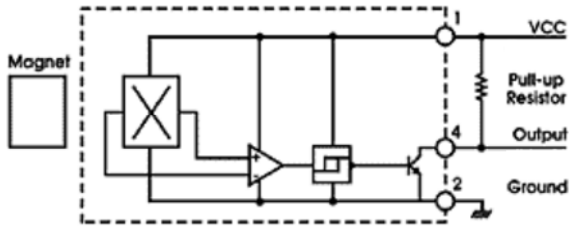


## Dimensions mm (inches)

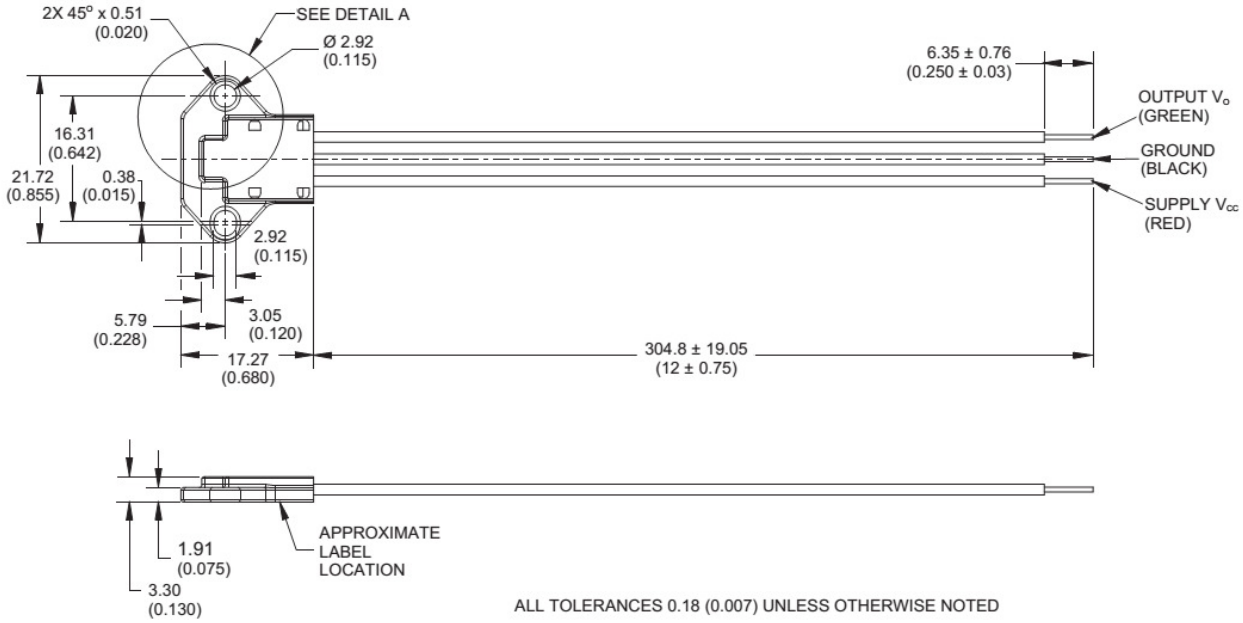


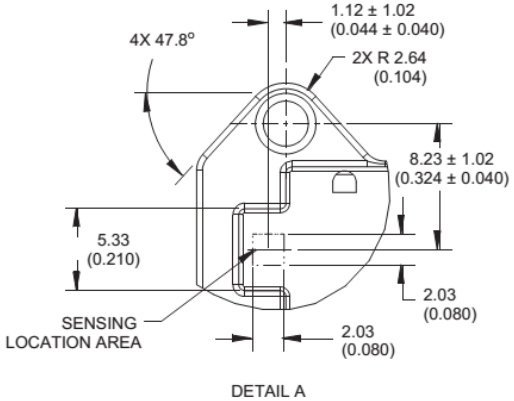


DETAIL A