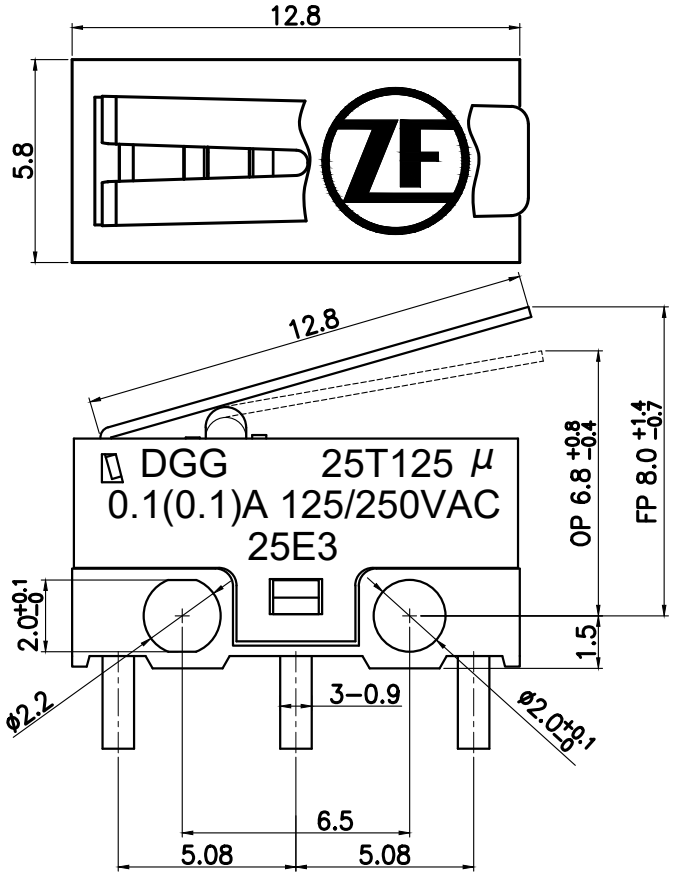

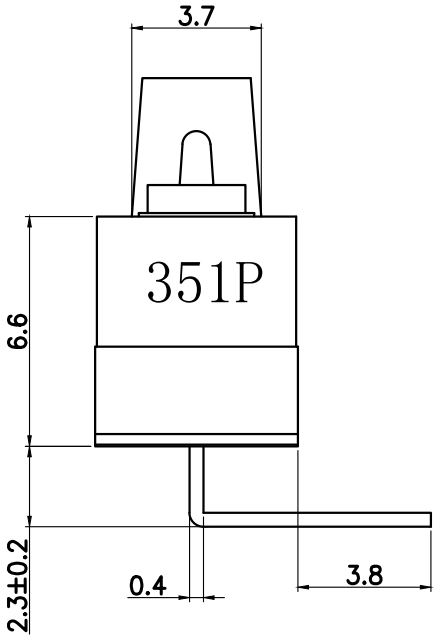

(Right)

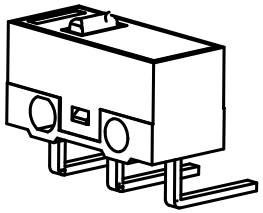

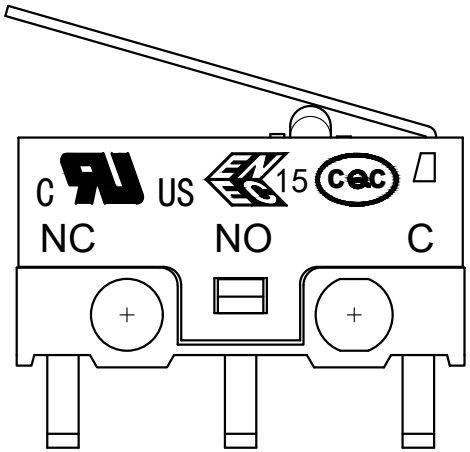

GENERAL CHARACTERISTICS

Operating Force	Max. 45gf
Release Force	Min. 10gf
Contact Resistance	Max. 50mΩ
Insulation Resistance	Min. 100MΩ 500VDC
Dielectric Voltage	AC500V 60 Sec.
Mechanical Life	1,000,000 Cycles
Rating (UL/ENEC Certified)	0.1(0.1)A, 125/250VAC 25,000 Cycles
Rating (UL Certified)	0.05A, 30VDC 25,000 Cycles
Rating (Not UL/ENEC Certified)	50mA, 30VDC 200,000 Cycles
Operating Temperature	−25 to 125℃

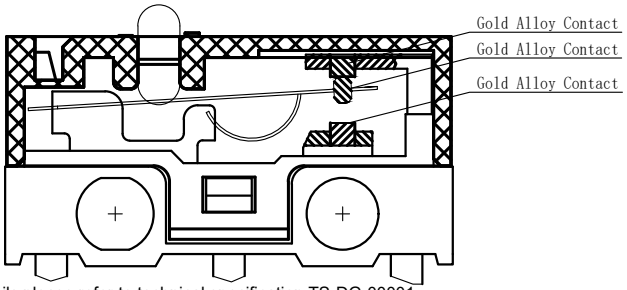

Further details please refer to technical specification TS-DG-00001.
In case there are any deviations the drawing details have priority.

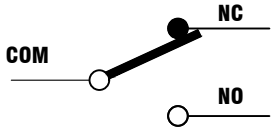

Circuit Diagram

35 1 P
- Zhuhai/China
- 2021 Year
- 35 Week

The date code could be printed on each lateral side randomly

NO.	PARTS	MATERIALS
01	COVER	PBT 94V0
02	BASE	PBT 94V0
03	ACTUATOR	PBT 94V0
04	CONTACT	Au ALLOY
05	MOVING BLADE	COPPER BERYLLIUM
06	TERMINAL(COM)	SILVER PLATE BRASS
07	TERMINAL(NO)	SILVER PLATE BRASS
08	TERMINAL(NC)	SILVER PLATE BRASS
09	AUX. ACTUATOR	SUS

采埃孚电子(珠海)有限公司
ZF Electronics (Zhuhai) Company Limited

记号 MARK.	变更内容 DEFINITION	修改 REVISE	核准 APPROVE	日期 DATE				
3					制图: DRAW	H,QIN	2020.12.11	TOLERANCE UNLESS SPECIFLED
2					设计: DESIGN	H,QIN	2020.12.11	WITHIN 1.5mm: ±0.1mm OVER 1.5mm: ±0.2mm
1	Rating	H,QIN	J.WANG	2024.05.15	审核: CHECKED	J.WANG	2020.12.16	材质: MATERIAL
					批准: APPROVE	J.WANG	2020.12.16	单位: UNIT mm

系列 SERIES	DG 0.1A微动开关/SUBMINIATURE SWITCH						
料号: TITLE	DGG3-E5LC			图号: DWG NO.	DGG3-E5LC		
比例: SCALE	1:1	角法: PROJ.		张数: SHEET	第1页,共1页	工程图 ENG. DWG	版本: REV. A0