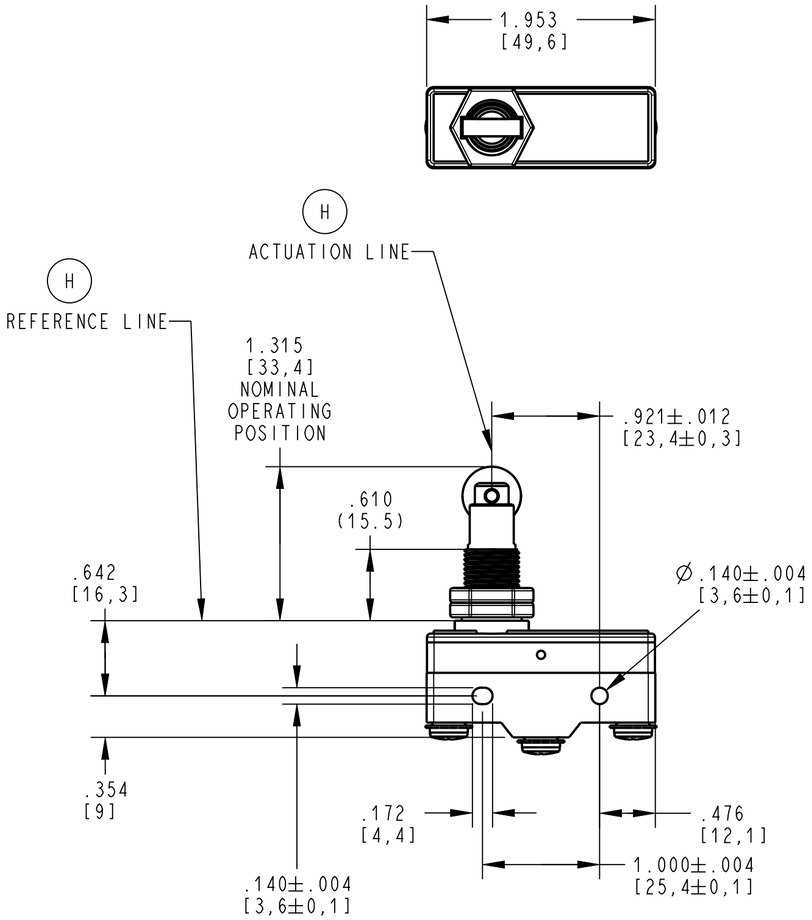

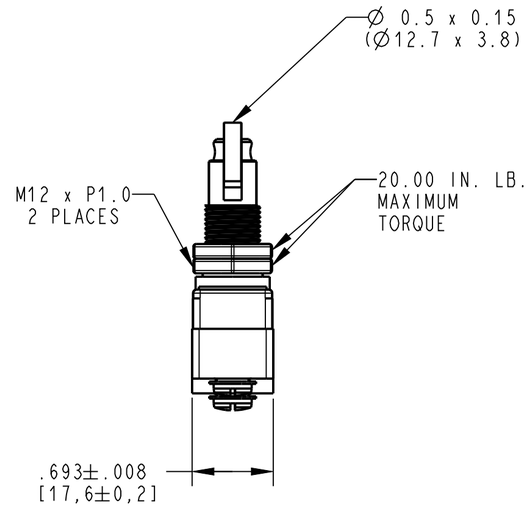

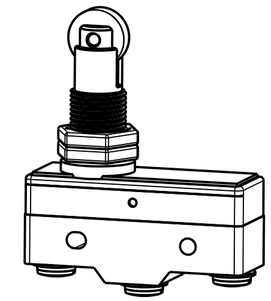

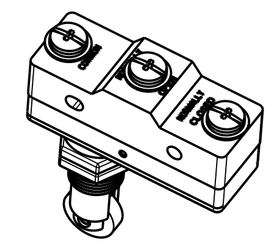

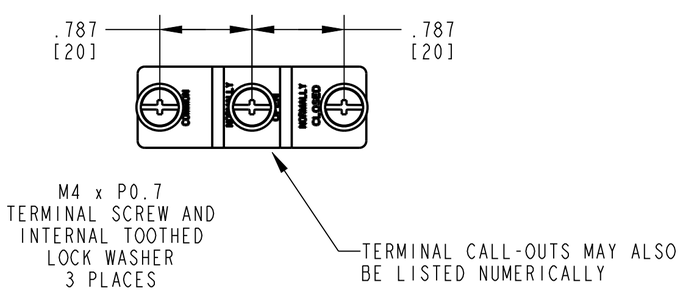

NOTES (UNLESS OTHERWISE SCPECIFIED):

1. RECOMMENDED MOUNTING: #6-32 FASTENER WITH 6.00 IN-LB (7.00 KGF-CM) OF TORQUE MAXIMUM.
2. (H) RECOGNIZED TO U.S. AND CANADIAN REQUIREMENTS UNDER THE COMPONENT RECOGNITION PROGRAM OF UNDERWRITERS LABORATORIES, INC.
3. ALL CHARACTERISTICS ARE TAKEN AT THE ACTUATION LINE AND MEASURED FROM THE REFERENCE LINE.
4. FOR MARKING AND NAMING SPECIFICATION SEE ES021295.

CHARACTERISTICS	
ELECTRICAL RATING	15A 250VAC T55°C (cULus) 15A 250VAC-5T40 (VDE) (H)
TERMINAL	SCREW
OPERATING FORCE MAX.	350 GRAMS
RELEASE FORCE MIN.	114 GRAMS
PRETRAVEL MAX.	.016 (0.4mm)
OVERTRAVEL MIN.	.140 (3.58mm)
MOVE DIFF. MAX.	.002 (0.05mm)
OPERATING POSITION	1.270 TOP 1.360 (32.2 TO 34.6)

REV	ECO NO.	DATE	PREP	APVD
H	Z000360152	2016-04-21	GP	EL

DWN: TLM
APVD: SG
DATE: 21-NOV-06
THIRD ANGLE PROJECTION

PROJECT/ CSR: 4000000138

CONFIDENTIAL AND PROPRIETARY:
ALL INFORMATION OR INVENTIONS CONTAINED IN THIS DOCUMENT OR DERIVED FROM THE INFORMATION THERE IN IS OWNED BY ZF ELECTRONIC SYSTEMS, AND IS CONFIDENTIAL AND PROPRIETARY. REVIEW OR POSSESSION OF THIS DOCUMENT INDICATES AGREEMENT THAT SUCH INFORMATION AND INVENTIONS WILL NOT BE DISCLOSED, REPRODUCED OR OTHERWISE USED IN ANY WAY WITHOUT EXPRESS WRITTEN PERMISSION FROM AN AUTHORIZED REPRESENTATIVE OF ZF ELECTRONIC SYSTEMS.

TOLERANCE UNLESS SPECIFIED

DWG UNITS	X.XX	X.XXX	ANGLES
INCH	± 0.02	± 0.015	± 5.0 °

ZF Electronic Systems
PLEASANT PRAIRIE, WISCONSIN U.S.A.
NAME / DESCRIPTION
SPEC DRAWING

C ITEM NO. GPTCRH11
SCALE: NOT TO SCALE SH 1 OF 1

ORIGINAL ON PRO/E